ESERCIZIO MOSFET A6

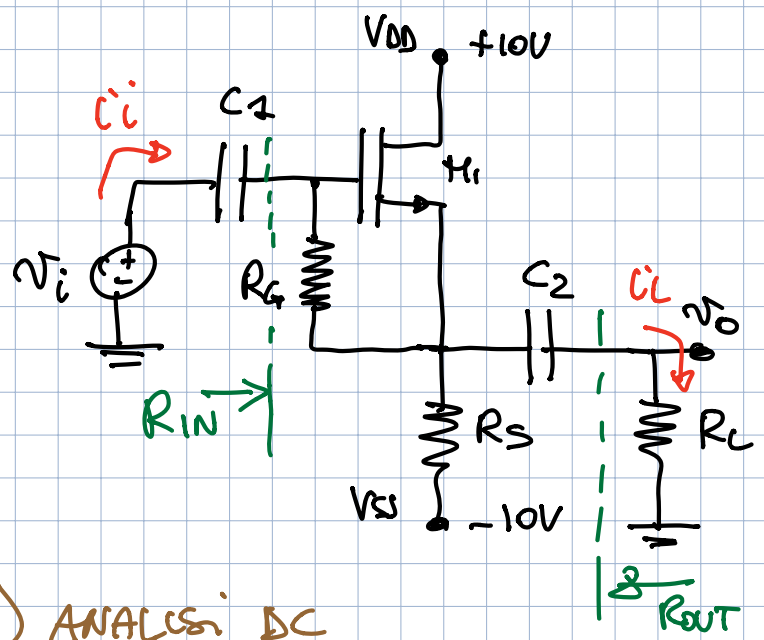

$V_{DD} = 10V$
$V_{SS} = -10V$
$R_G = 1M\Omega$
$R_S = 5K\Omega$
$R_L = 5K\Omega$
$V_{TN} = -2V$
$K_n = 1mA/V^2$
$\lambda = 0$

TROVARE IL PUNTO DI LAVORO DI M_1 e $A_v = \frac{v_o}{v_i}$, $A_i = \frac{i_L}{i_i}$
R_{IN} e R_{OUT}

1) ANALISI DC

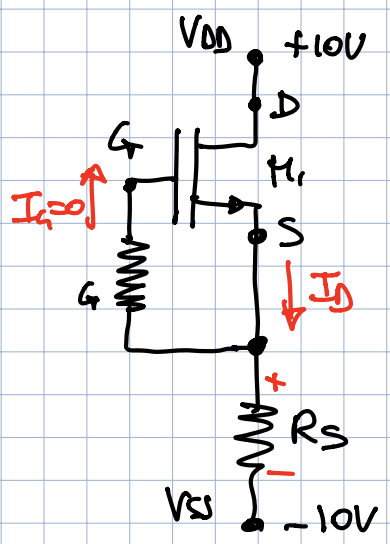

$I_G = 0 \Rightarrow V_{GS} < V_{TN}$

$$I_D = \frac{K_n}{2}(V_{GS} - V_{TN})^2 = \frac{1mA}{2V^2}(0-2V)^2 = 2mA$$

$$V_S = V_{SS} + R_S I_D = -10V + 10V = 0V$$

$$V_{DS} = V_D - V_S = 10V - 0V = 0V$$

$V_{DS} > V_{GS} - V_{TN}$?

$10V > 0 - (-2V) = 2V$ Sì OK SATURAZIONE

$M_1 : [I_D = 2mA, V_{DS} = 10V]$

2) CALCOLO PARAMETRI AL PICCOLO SEGNALE

$$g_m = \frac{2I_D}{(V_{GS} - V_{TN})} = \frac{4mA}{2V} = 2mS \qquad r_o = \infty$$

3) ANALISI AL PICCOLO SEGNALE

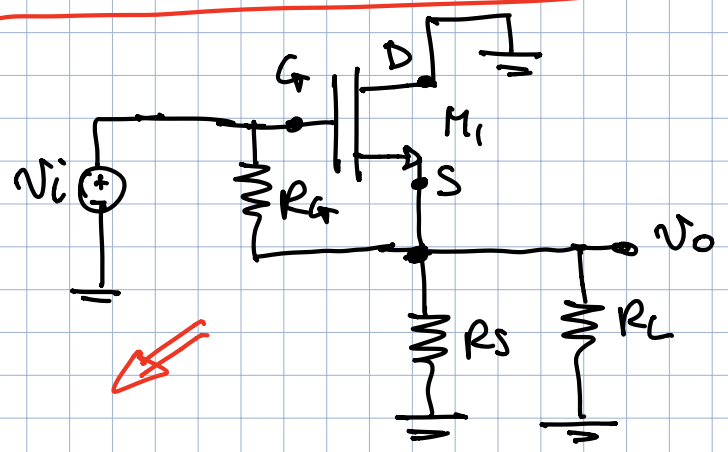

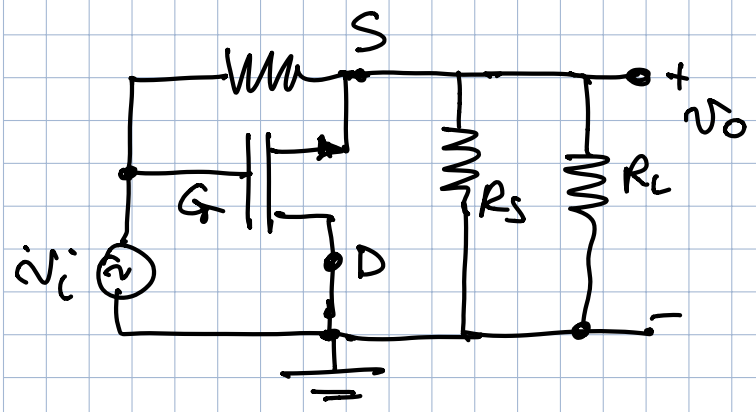

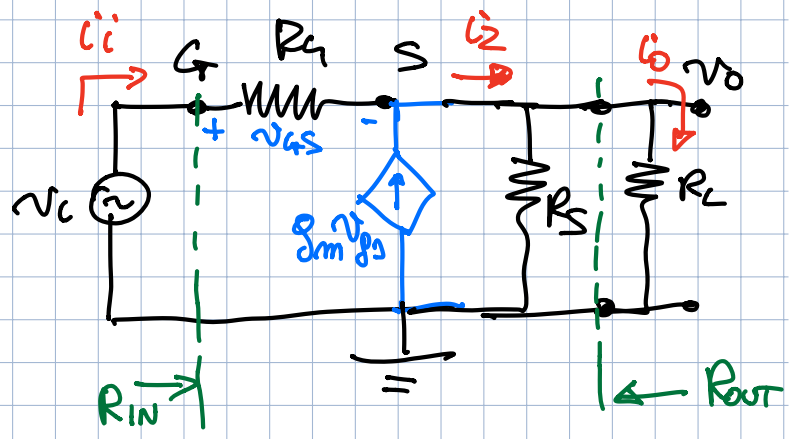

$$i_2 = i_i + g_m v_{gs} = i_i + g_m i_i R_G = i_i(1+g_m R_G)$$

$$v_o = i_i(1+g_m R_G) R_S // R_L$$

$$v_i = i_i R_G + i_i(1+g_m R_G) R_S // R_L$$

$$= i_i\left[R_G + (1+g_m R_G) R_S // R_L\right] \quad (*)$$

$$\Rightarrow \frac{v_o}{v_i} = \frac{(1+g_m R_G) R_S // R_L}{R_G + (1+g_m) R_G R_S // R_L} \simeq \frac{5\cdot 10^6}{6\cdot 10^6} = 0{,}833$$

$R_S // R_L = 2{,}5\ K\Omega = 2{,}5\cdot 10^3$

$g_m R_G = 2mS \cdot 10^6 \Omega = 2000 = 2\cdot 10^3$

$$i_o = i_2 \cdot \frac{R_S}{R_S+R_L} \quad \text{(PARTITORE DI CORRENTE)}$$

$$= i_i(1+g_m R_G)\frac{R_S}{R_S+R_L}$$

$$\Rightarrow A_i = \frac{i_o}{i_i} = (1+g_m R_G)\frac{R_S}{R_S+R_L} = 2001\cdot\frac{1}{2} = 1000{,}5$$

R_{IN} ? $\quad R_{IN} = \frac{v_i}{i_i} = (*) = R_G + (1+g_m R_G) R_S // R_L$

$$= 1\,M\Omega + 5\,M\Omega \simeq 6\,M\Omega\ !$$

$$A_i = \frac{i_o}{i_i} = \frac{v_o}{R_L} \cdot \frac{R_{IN}}{v_i} = A_v \cdot \frac{R_{IN}}{R_L} \cong 0{,}83 \cdot \frac{6\,M\Omega}{5\,K\Omega} = \underline{1000!}$$

R_{OUT}?

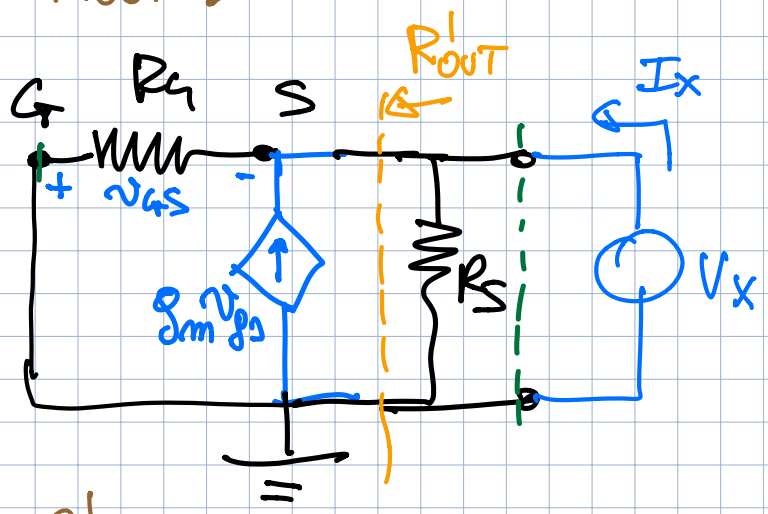

$$R_{OUT} = R_S // R'_{OUT}$$

R'_{OUT}

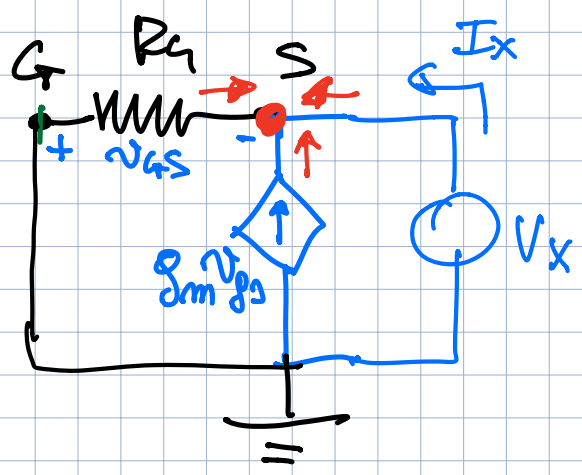

$$V_x = -v_{GS}$$

$$\frac{v_{GS}}{R_G} + g_m v_{gs} + I_x = 0$$

$$v_{GS}\left(\frac{1}{R_G} + g_m\right) + I_x = 0$$

$$V_x\left(\frac{1 + g_m R_G}{R_G}\right) = I_x$$

$$R'_{OUT} = \frac{V_x}{I_x} = \frac{R_G}{1 + g_m R_G} = \frac{1\,M\Omega}{2000} = 500\,\Omega$$

$$\Rightarrow R_{OUT} = R_S // R'_{OUT} = 5\,K\Omega // 0{,}5\,K\Omega = 454{,}5\,\Omega$$